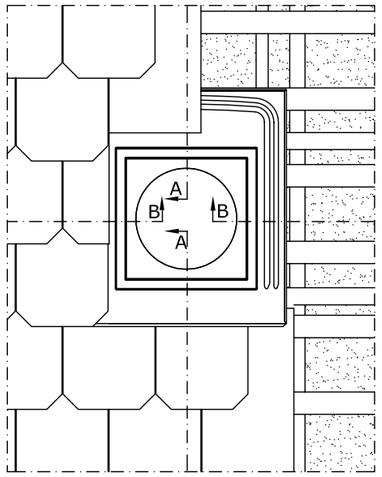

Vooraanzicht

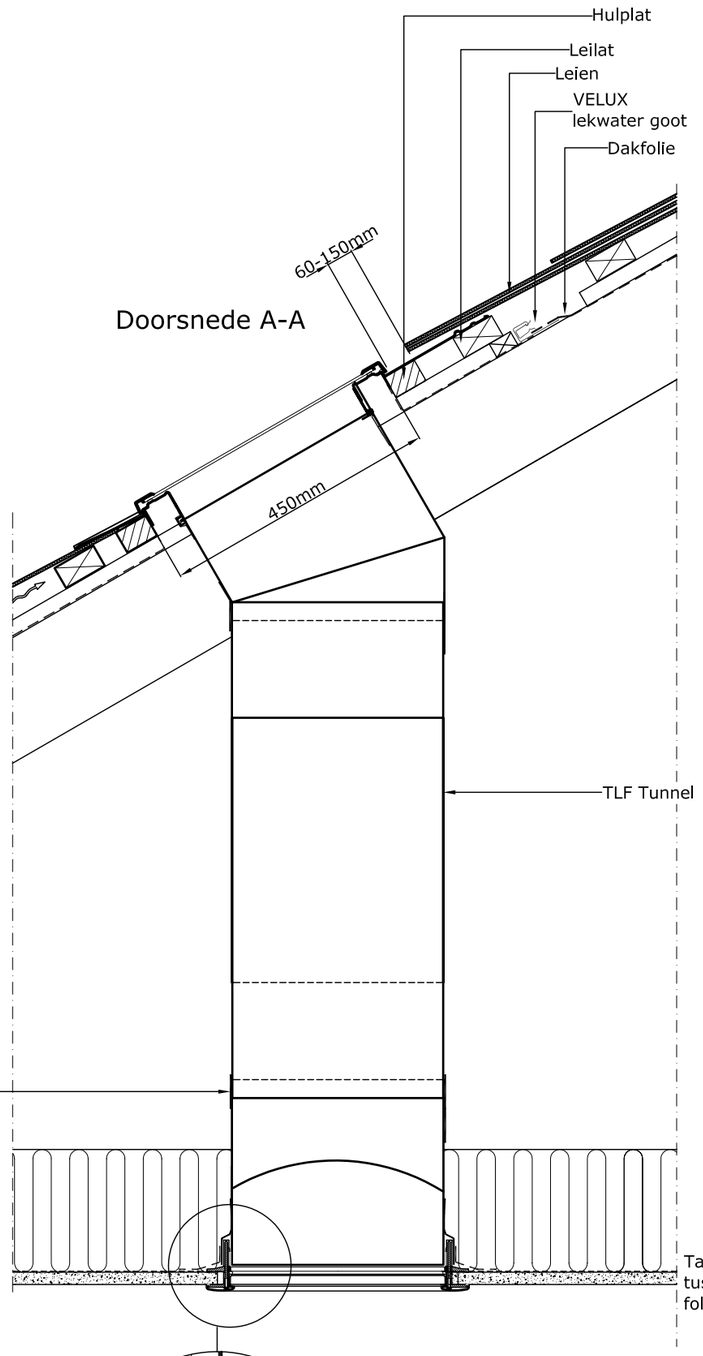

Doorsnede A-A

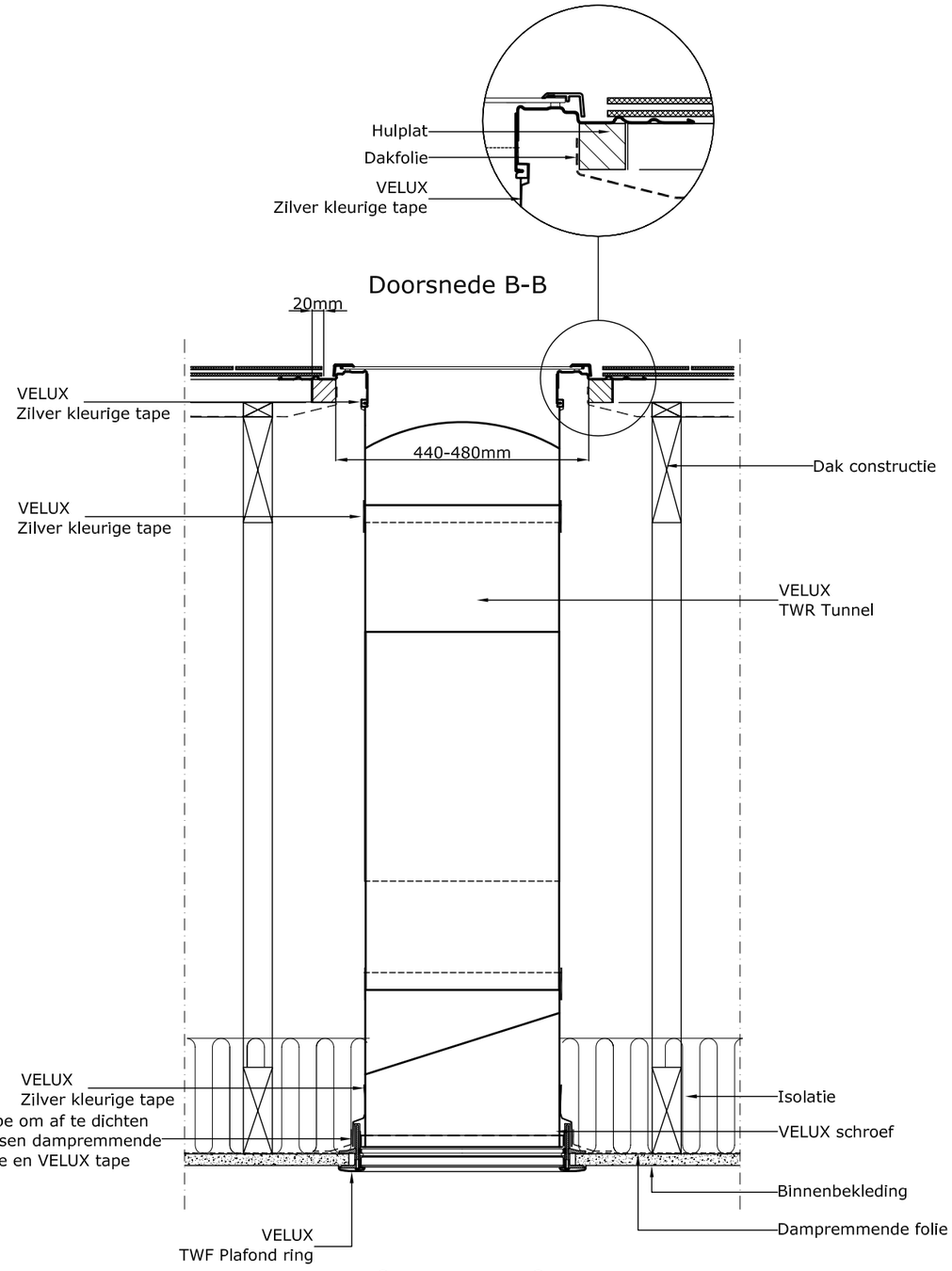

Doorsnede B-B

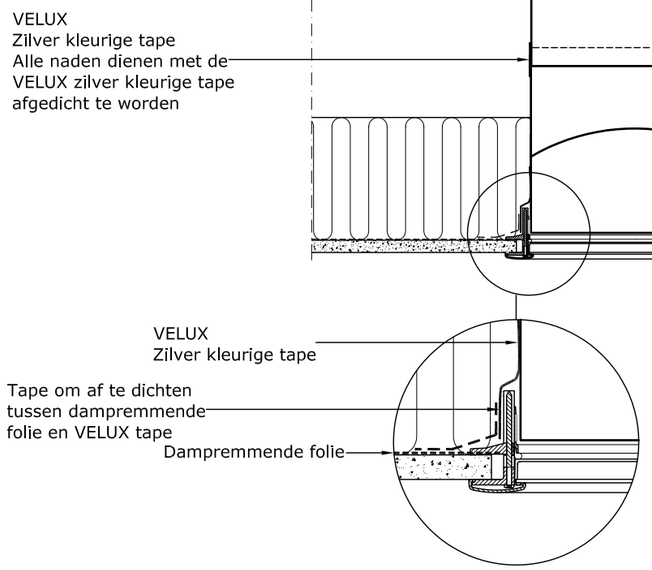

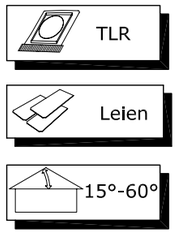

© VELUX GROUP ® VELUX, VELUX logo are registered trademarks

VELUX®

VELUX A/S
Product Management
Installation support

TLR_leien	Date 17.07.07 All measurement in mm	File name A_000442	Drawing no. 35
	SCo www.velux.nl		